OEM Connections

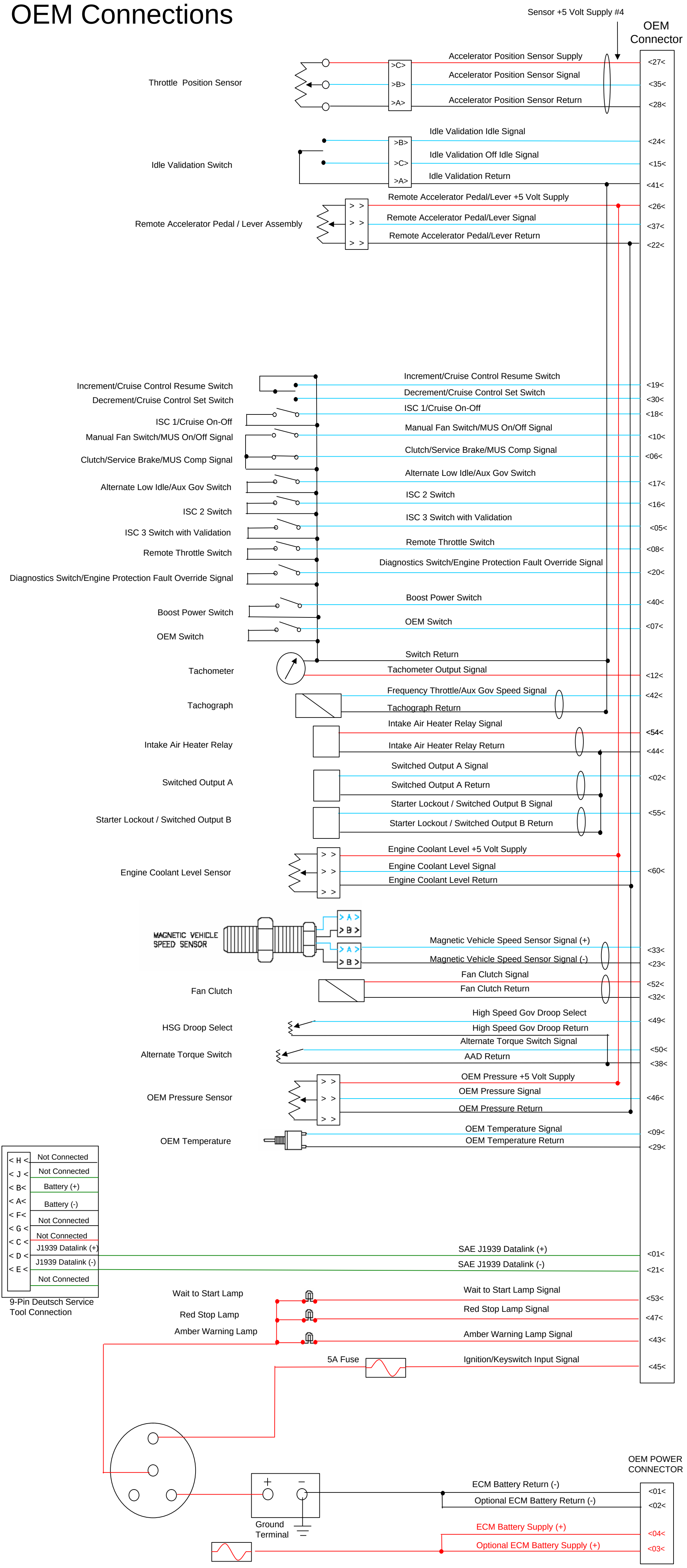

QSB3.3 with CM2150C Electronic Control Module Wiring Diagram

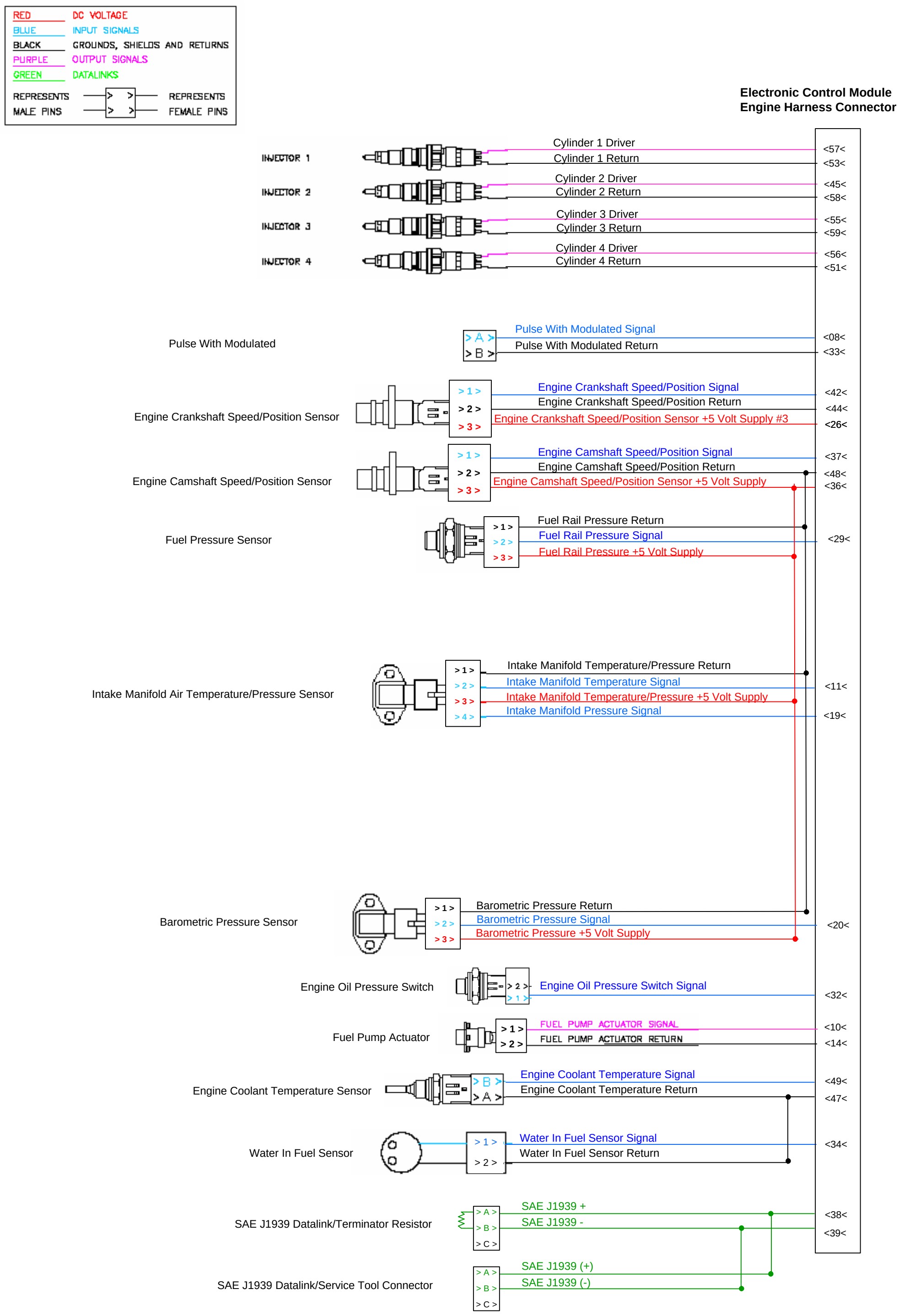
RED DC VOLTAGE
BLUE INPUT SIGNALS
BLACK GROUNDS, SHIELDS AND RETURNS
PURPLE OUTPUT SIGNALS
GREEN DATALINKS
REPRESENTS MALE PINS
REPRESENTS FEMALE PINS
Electronic Control Module
Engine Harness Connector
INJECTOR 1
Cylinder 1 Driver <57<
Cylinder 1 Return <53<
INJECTOR 2
Cylinder 2 Driver <45<
Cylinder 2 Return <58<
INJECTOR 3
Cylinder 3 Driver <55<
Cylinder 3 Return <59<
INJECTOR 4
Cylinder 4 Driver <56<
Cylinder 4 Return <51<
Pulse With Modulated
Pulse With Modulated Signal <08<
Pulse With Modulated Return <33<
Engine Crankshaft Speed/Position Sensor
Engine Crankshaft Speed/Position Signal <42<
Engine Crankshaft Speed/Position Return <44<
Engine Crankshaft Speed/Position Sensor +5 Volt Supply #3 <26<
Engine Camshaft Speed/Position Sensor
Engine Camshaft Speed/Position Signal <37<
Engine Camshaft Speed/Position Return <48<
Engine Camshaft Speed/Position Sensor +5 Volt Supply <36<
Fuel Pressure Sensor
Fuel Rail Pressure Return
Fuel Rail Pressure Signal <29<
Fuel Rail Pressure +5 Volt Supply
Intake Manifold Air Temperature/Pressure Sensor
Intake Manifold Temperature/Pressure Return
Intake Manifold Temperature Signal <11<
Intake Manifold Temperature/Pressure +5 Volt Supply
Intake Manifold Pressure Signal <19<
Barometric Pressure Sensor
Barometric Pressure Return
Barometric Pressure Signal <20<
Barometric Pressure +5 Volt Supply
Engine Oil Pressure Switch
Engine Oil Pressure Switch Signal <32<
Fuel Pump Actuator
FUEL PUMP ACTUATOR SIGNAL <10<
FUEL PUMP ACTUATOR RETURN <14<
Engine Coolant Temperature Sensor
Engine Coolant Temperature Signal <49<
Engine Coolant Temperature Return <47<
Water In Fuel Sensor
Water In Fuel Sensor Signal <34<
Water In Fuel Sensor Return
SAE J1939 Datalink/Terminator Resistor
SAE J1939 + <38<
SAE J1939 - <39<
SAE J1939 Datalink/Service Tool Connector
SAE J1939 (+)
SAE J1939 (-)